# AMBIC®

## EasiFoamer™


# OPERATING INSTRUCTIONS

*leading best practice in livestock health management*

**Fig. 1 – GENERAL LAYOUT OF SINGLE PUMP EASIFOAMER SYSTEM**

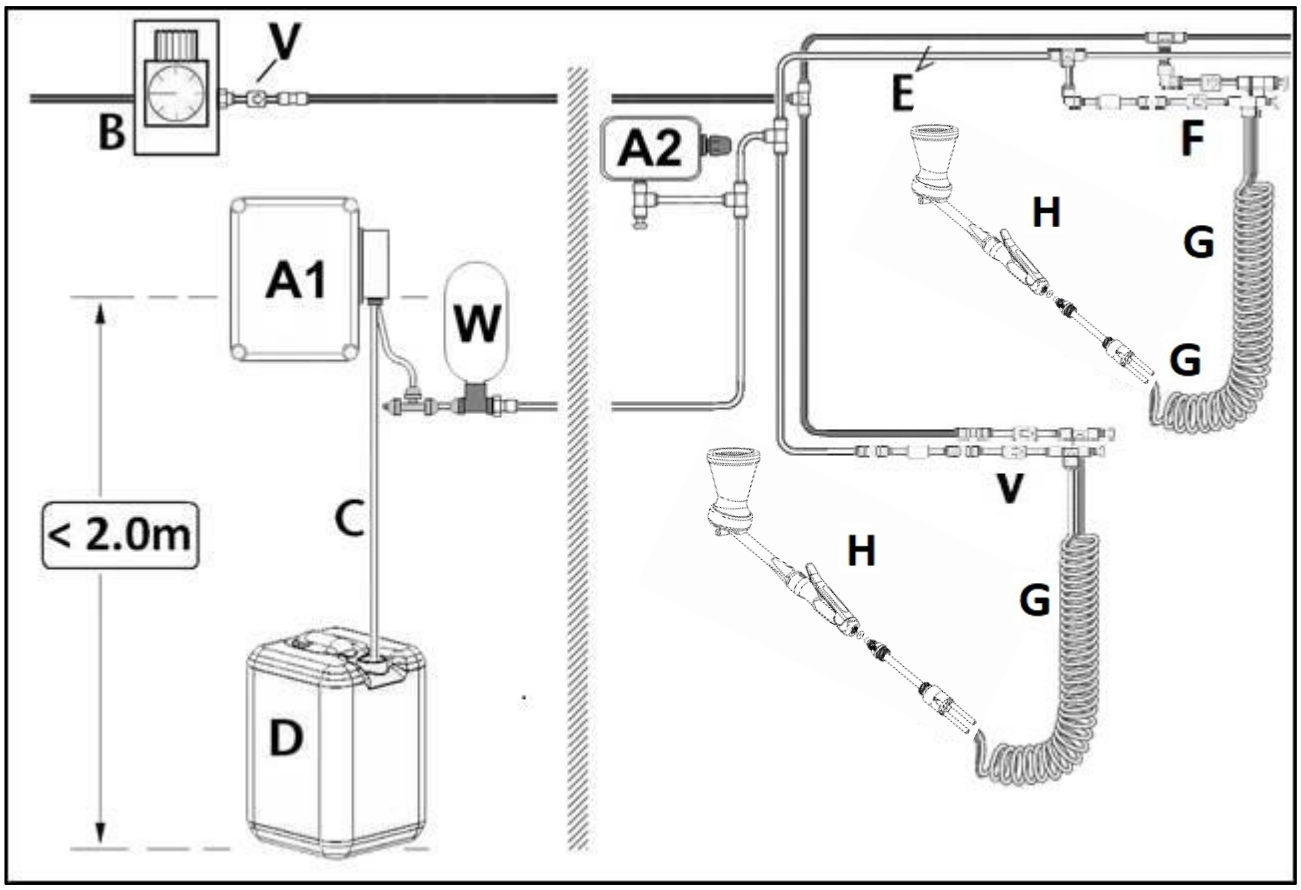


**Fig. 1B – TWIN PUMP EASIFOAMER INSTALLATION – TYPICAL INSTALLATION LAYOUT**

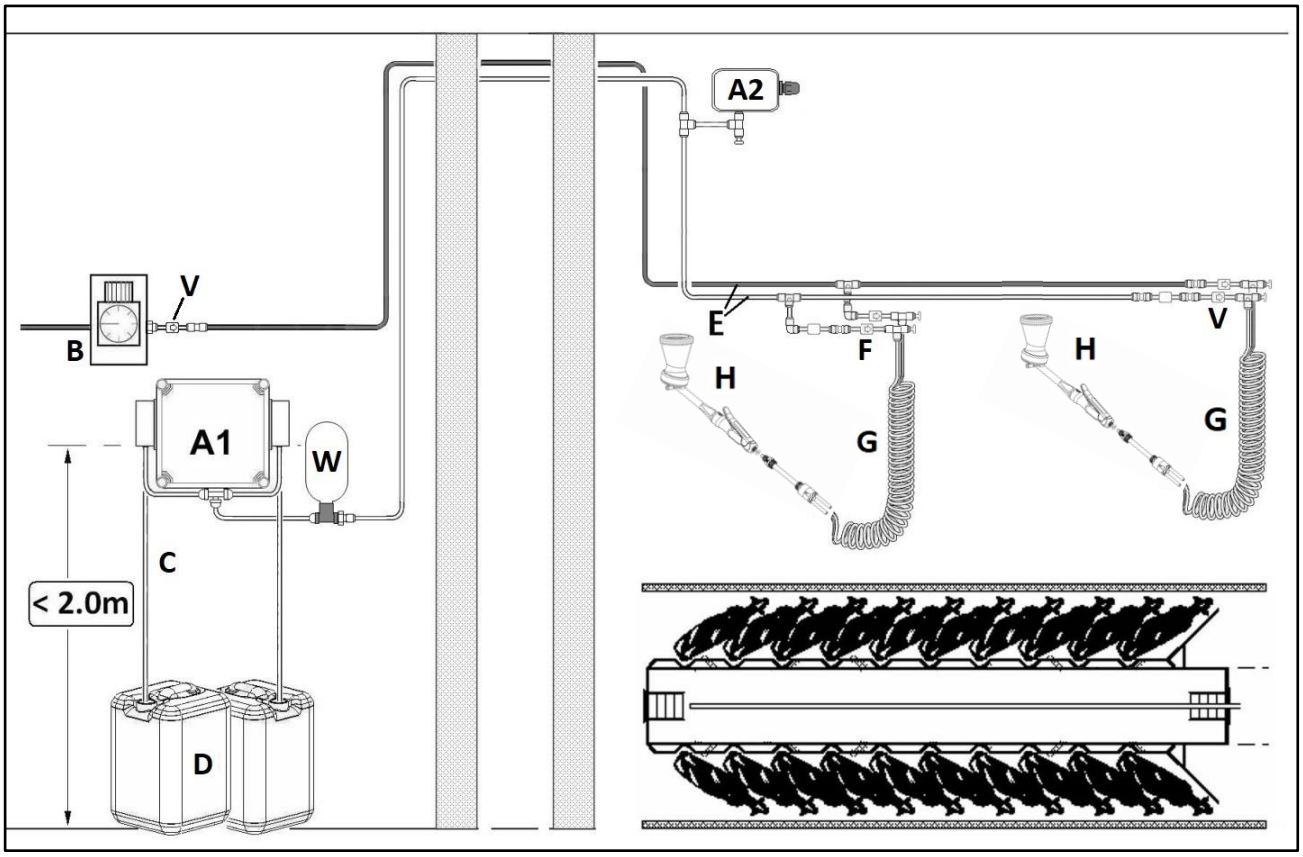

## Introduction

The EasiFoamer™ is designed to be installed using twin distribution tubes of 4mm bore (1/4" outside diameter) – the BLACK tube supplies compressed air; the BLUE tube supplies pressurised teat disinfectant chemical – both at a low pressure 3 - 5 psi (0.2 - 0.4 Bar) – see Fig 1. Chemical and air are supplied to the foaming applicators, which generate foam in the cup whilst the trigger is held depressed. **WARNING** – Use only the BLUE tube for the CHEMICAL – the Black tube may be attacked by some chemicals.

## Safety

The EasiFoamer™ Foam Teat Dipping System is designed exclusively for use in milking installations. Any application outside the use described in this operating manual will be taken to be not in accordance with the intended purpose. The manufacturer/supplier will not be held responsible for any losses arising as a result of such use. The user will take full responsibility for use. USE IN ACCORDANCE WITH THE INTENDED PURPOSE ALSO INCLUDES COMPLYING WITH THE OPERATING MANUAL AND THE CONDITIONS FOR INSPECTION AND MAINTENANCE.

## Specifications

| | | | |
|---|---|---|---|
| Power Source – Liquid | – Electric Pumping unit | • | 220-240V AC 50Hz |
| | | • | *115V AC 60Hz* |
| | – Fuses | • | T1.0A |
| Power Source – Air | – Compressed Air | • | 5 -10L/min at 3 - 7psi (0.2 - 0.5 Bar) |
| Maximum No. of Applicators per Pumping Unit | | • | 10 |
| Maximum No. of Applicators operating simultaneously | | • | 2 |
| Maximum Length of Distribution Tubing (Black or Blue) | | • | 45 Metres (150 ft) |
| Typical Chemical Consumption per Applicator | | • | 1.5 – 2.5 mL/second |
| Operating Temperature | | • | 5 – 40 °C |

## Installation (refer to Fig. 1, 1B, 1C & 6)

**Electrical Installation** - should ideally be carried out by a Qualified Electrician – EXCEPT where a suitable waterproof plug outlet is available. THIS ELECTRICAL SUPPLY SHOULD BE PROTECTED BY AN APPROPRIATE EARTH LEAKAGE CIRCUIT BREAKER. IT IS RECOMMENDED THAT THE ELECTRICAL SUPPLY SHOULD BE SWITCHED OFF AUTOMATICALLY WHEN THE VACUUM PUMP IS NOT IN OPERATION. Please refer to Fig. 6 for connections.

**Pressurised Chemical** – is sucked up from a chemical container by peristaltic pump(s). The enclosure housing the pump(s) of the EasiFoamer™ is rated at IP44 (IEC 60529), the power unit (A) must therefore be positioned outside of the milking parlour in a dry location and close to a 220 –240V AC or 115V AC power socket. The 3-core power supply cord MUST remain accessible when the unit has been installed and MUST be connected to Earth.

**The large enclosure** (**A1**) should be positioned no more than 2 metres vertically above the floor and no more than 3 metres distant from the chemical container(s). For efficient and reliable operation the maximum vertical distance from pump to distribution line should be less than 1 metre. Use the **DRILLING TEMPLATE** to mark out screw positions and fix the enclosure to a suitable flat wall, using the screws and plastic plugs supplied.

**NOTE:** Allow sufficient space to the Right of the enclosure for mounting the **Pressure Reservoir Bottle** (**W**), which **MUST** be in an **UPRIGHT** position, using a single screw (see Fig. 1C).

**The small enclosure** (**A2**) **housing the Pressure Switch** (connected to the large enclosure by 10 metres of cable) should be screwed to a flat vertical surface (e.g. Wall) - PREFERABLY IN, or close to, THE MILKING PARLOUR - but as close as possible to the highest point of the distribution tubing (see Fig. 1C).

The cable may be temporarily disconnected from the PCB inside the large enclosure (**A1**). When reconnecting the cable ensure that all 3 wires are correctly connected. Use Cable clips supplied to secure cable.

continued . . .

**The chemical container(s) (D)** should be placed securely on the floor and the Inlet Tube(s) (**C**) from the pump enclosure connected to the Inlet nipple(s) of the peristaltic pump(s) – each PVC inlet tube should be warmed before pushing over the peristaltic pump nipple and securing with the stainless steel hose clips supplied. Make sure that clips are fitted so that the barb of the fitting on the pump is central in the clip and do NOT over tighten the clip (you risk breaking the plastic nipple). Drop the filter end of the inlet tube(s) into the chemical container(s) – ALWAYS ENSURE that each inlet tube has a FILTER FITTED.

**Low Pressure Air** is supplied, via the Regulator (**B**), from a DRY compressed air supply of 2-6 Bar (30-90 psi), using suitable connection fittings (not supplied). The enclosure containing the Regulator is sealed to IP55 and may be situated in any convenient, easily accessible location. The Non-Return Valve (**V**) is installed in the outlet line to protect the compressor in the event of any Non-Return Valve failure elsewhere in the system. During the initial system setting up process, it may be necessary to adjust the pressure regulator setting to obtain ideal operating conditions for efficient foam production.

**The Pressure Switch** allows the liquid pressure level to be adjusted in the range 2-5 psi (0.2-0.3 Bar) by means of a setscrew on the switch.

1. Turn off the mains power at the switch and disconnect the unit from the Mains Power supply.
2. Unscrew the 4 screws and lift the lid of the small enclosure (**A2**) to allow access to the inside of the enclosure; the pressure switch is arrowed in the photograph opposite.
3. Use a 5/64” (2mm) Hexagon Key to turn the recessed screw on the switch at the opposite end to the electrical connections (see next photo below opposite).
4. When viewed from above, turning the screw CLOCKWISE will INCREASE PRESSURE; ANTICLOCKWISE will DECREASE liquid Pressure. (see diagram below).

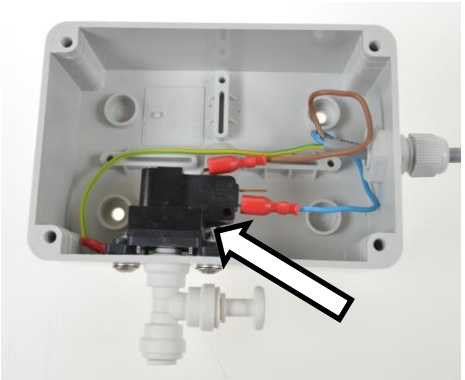

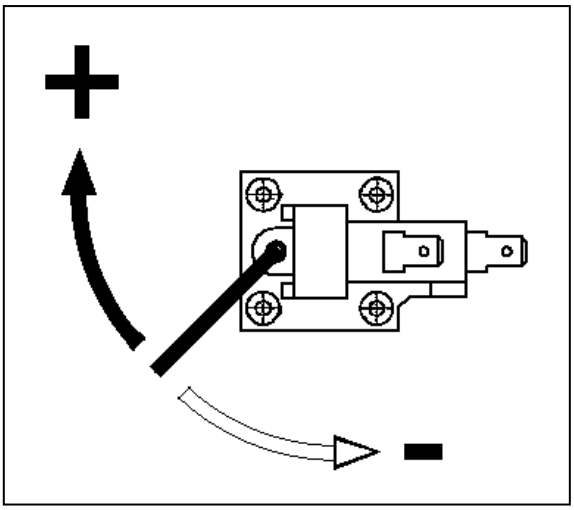


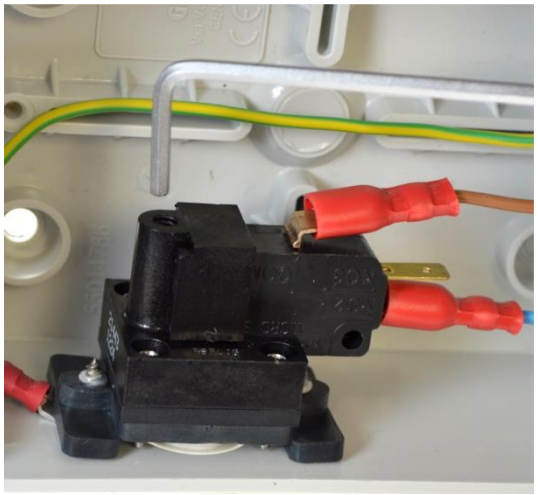

5. Each full turn of the adjusting screw increases/decreases the pressure by ~1 psi (~0.1 Bar).

   It is recommended that NO MORE THAN 3 TURNS of the adjusting screw be made in either direction. IF THE SCREW BECOMES LOOSE TO TURN, DO NOT TURN any further as you risk causing permanent damage to the switch.

6. Remove the Hexagon Key and close the lid before re-connecting the unit to Mains Power to check if further adjustments are necessary.

continued . . .

**Installation (continued)**

**Fig. 1C – EASIFOAMER INSTALLATION – ENCLOSURE / PRESSURE BOTTLE ASSEMBLY**

**SINGLE PUMP UNIT** **TWIN PUMP UNIT**

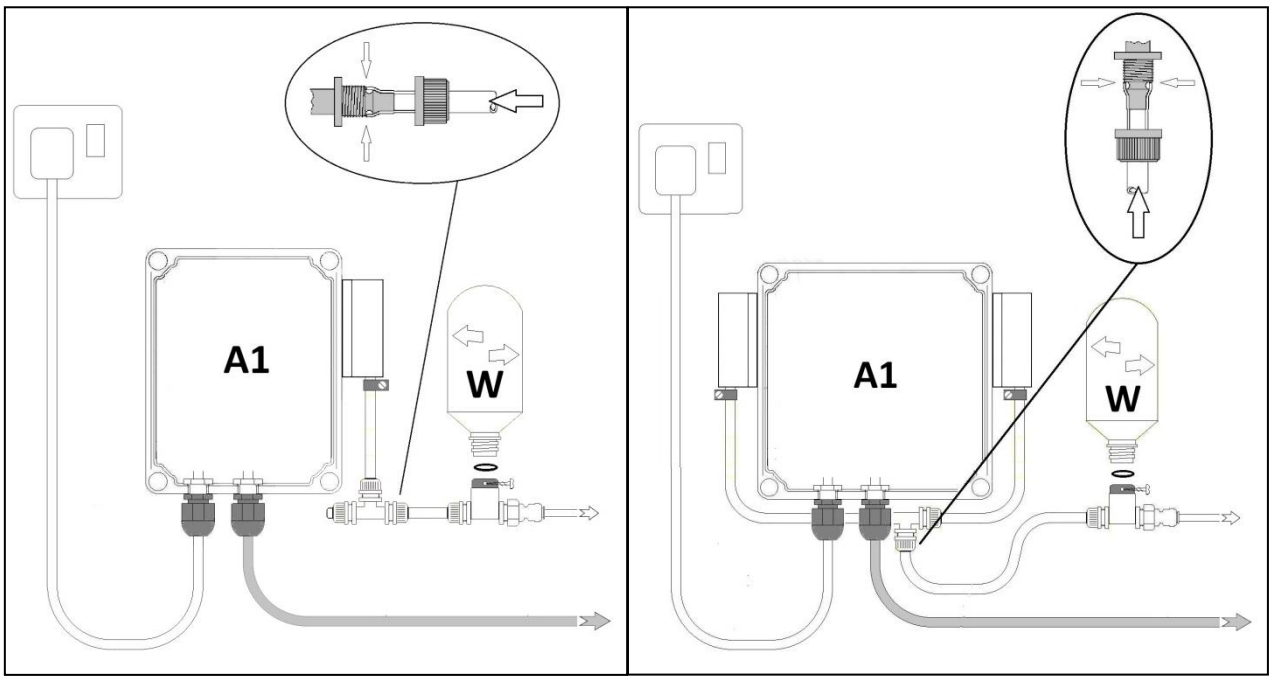


Twin Distribution tubes (Black & Blue) - Routing of the distribution tubes (**E**) will depend on the parlour design and can be either at high level, or low level. In order to ensure efficient operation of the foaming applicators route the distribution line so it is as short as possible. Distribution tubes can be routed at high level, along the centre of the parlour, or at low level underneath the cow standing kerb. Twin Tube Fixing Brackets (**J**) are supplied and used to secure the main distribution tubing to suitable stallwork, using a single cable tie (**K**) around the tube to clamp the two halves of the brackets together (see Fig. 2). Alternatively, these Fixing Brackets may be affixed to a flat surface using a suitable screw (not supplied) through the central hole.

**Fig. 2 –TWIN TUBE FIXING BRACKETS – ASSEMBLY/FIXING**

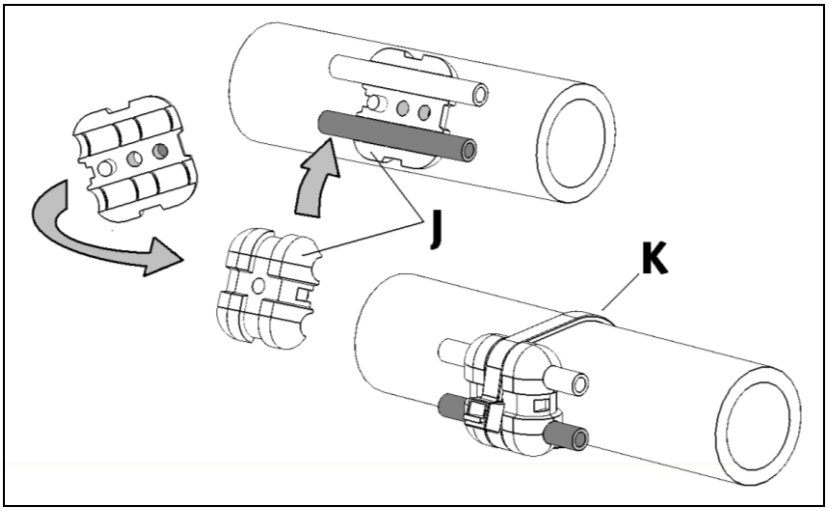


**T-pieces (F) and other distribution line fittings** are "push-in" and can be released by holding the flange in and pulling out the tubing – see diagrams Fig. 4 – it is important that tubes are pushed fully into fittings as otherwise air (or liquid) will leak out from the tube/fitting.

**Foam Applicators** should be positioned such that all milking points can be reached comfortably without over-stretching the coils. Extension kits are available to enable as many Applicators as may be required to be installed.

**WARNING: Do NOT over-stretch the coils**, as this will place undue strain on the tubing and may result in the connectors, or manifold, leaking or becoming damaged. It is therefore NOT recommended to allow the applicator to hang from the coil when not in use, as this will result in over-stretching of the coil and possible damage to the applicator through contact with the floor.

continued . . .

**Fig. 3 – ASSEMBLY OF EASIFOAMER FOAM APPLICATORS**

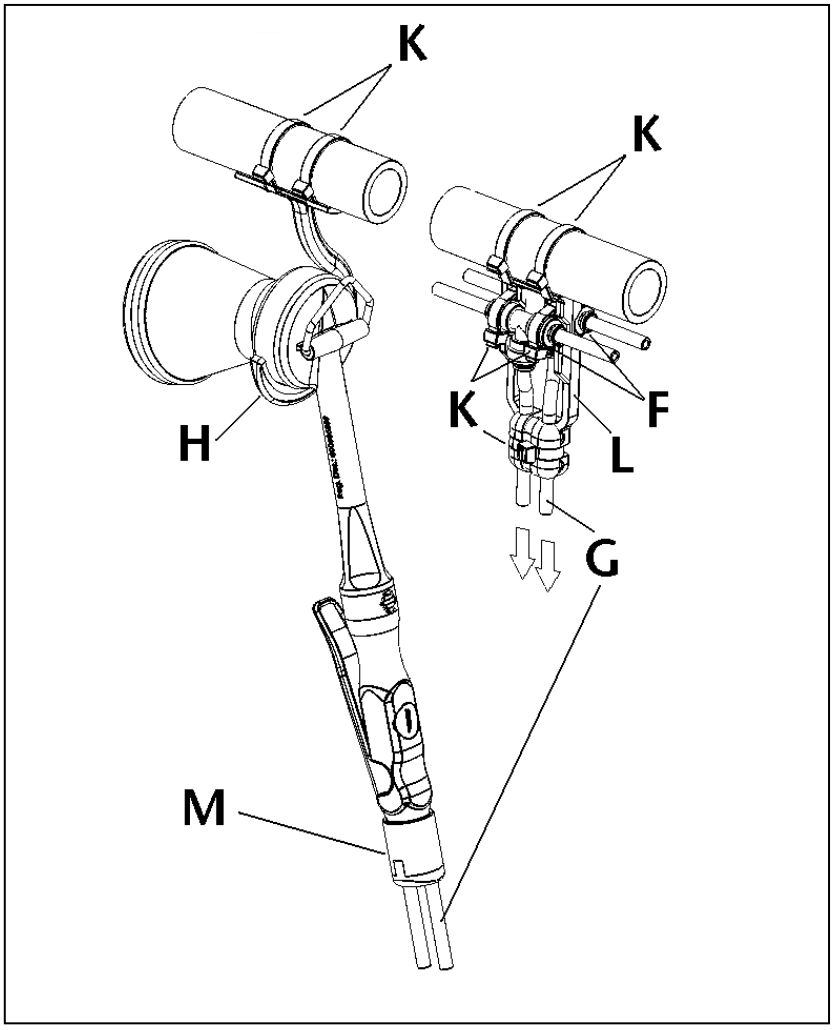


**Fig. 4 – USING "PUSH-FIT"CONNECTIONS**

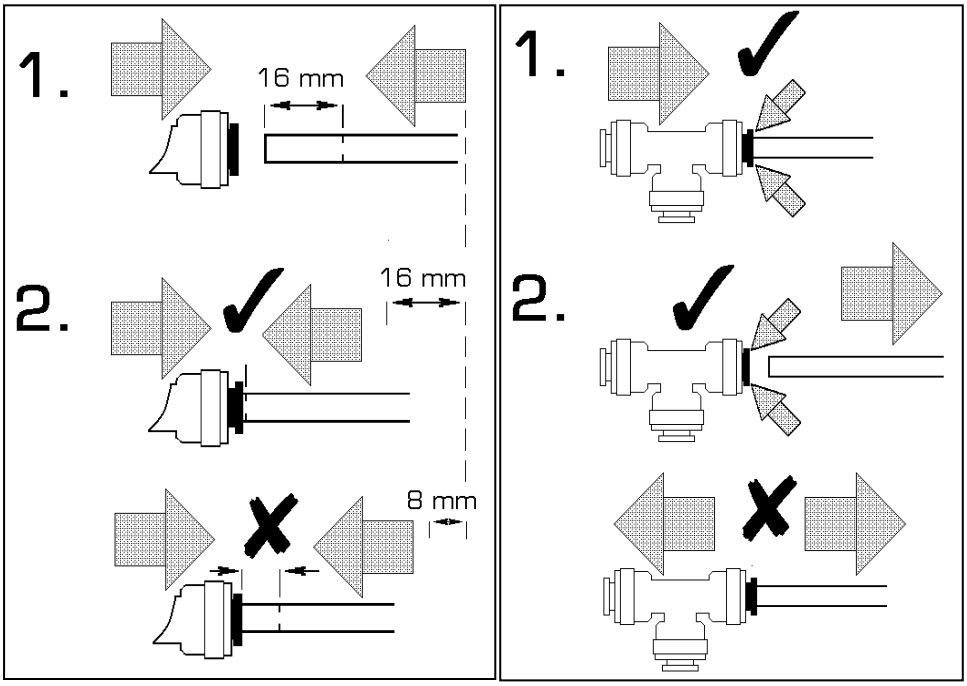

## Installation (continued)

The Plastic Hanging Hook (see Fig. 3, **H**) may be fitted to a suitable horizontal tube using 2 cable ties (**K**), or can be drilled with 2 holes and fitted (by 2 screws or bolts) to a flat surface. It is so designed that the cup of the applicator can rest in the Plastic Hanging Hook.

Support Brackets are supplied for each drop point; these serve both to hold the two T-pieces (**F**) and to support the coil ends to avoid a direct pull on the connections. The Support Brackets (**L**) are designed to be fitted to a horizontal tube using 2 cable ties (**K**) around the tubing (see Fig. 3). If a suitable horizontal tube is not available, then Support Brackets should be fitted by alternative means.

The 2 T-pieces (**F**) of the distribution line locate into either side of the Support Bracket (**L**) and are secured by two cable ties (see Fig. 3, **K**). The tubes from the twin tube coil (**G**) are pushed firmly into the respective T-pieces (F) and are twisted slightly to rest in the guides; the tubes are then clamped in place by fitting the final section of the bracket and securing it with a M4 bolt and lock-nut or a single cable tie (**K**).
**NOTE:** It is essential that the black and blue spiral tubes which form the drop coils are connected to the appropriate distribution lines so that all the BLACK coil tubes are connected to the BLACK distribution line carrying the air and all of the BLUE coil tubes are connected to the BLUE distribution line carrying the CHEMICAL.

Non-Return Valves (see Fig. 1, **V**) - In this version of the EasiFoamer™ discreet Non-Return Valves are used. 2 Non-Return Valves are supplied with each Drop Point; these valves should be sited as indicated in Fig. 5.

- 1 Non-Return Valve in the Air Supply tube
- 1 Non-Return Valve in the Liquid Supply tube

The valves should both be sited immediately before the Drop Coil Support Bracket with the GREY parts (arrows) pointing towards the Foam Applicator.

The Non-Return Valves should be pushed well in to fittings (typically 16mm minimum) to ensure proper sealing with the internal O-ring. Valves may be removed from the fittings by pushing in the collet then pulling out the tubing (as per other push-fit fittings used with this equipment).

Each Drop Point must have its own pair of Non-Return Valves – hence the use of the T-pieces in the distribution line where more than one Drop Point is fitted.

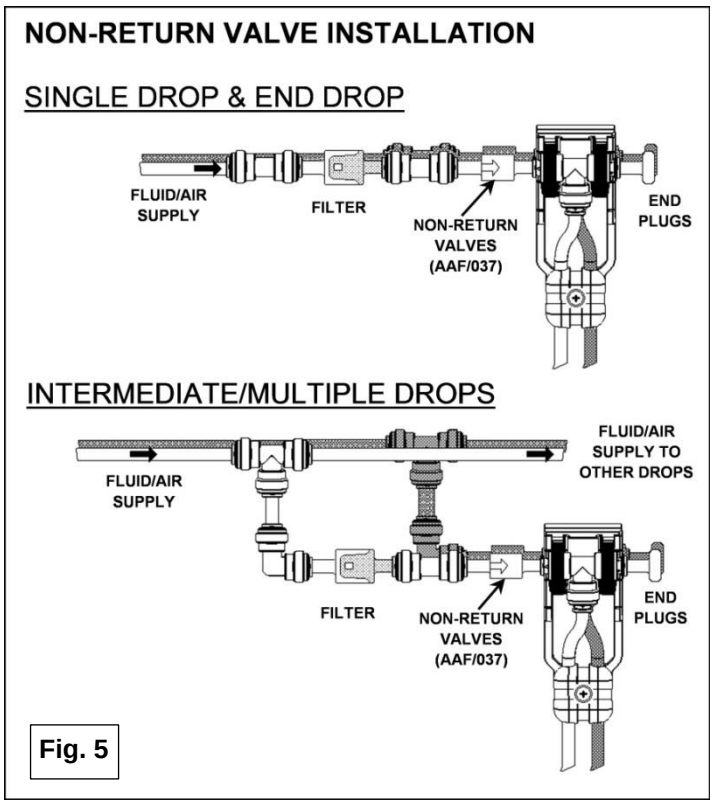

**Fig. 5**

**WARNING –** the system will NOT produce foam correctly if the Non-Return Valves are missing or incorrectly fitted.

Fitting of the Foam Applicator to the Drop Coil is by way of the Manifold (**M**) which is delivered ready-fitted to one end of the Drop Coil.
The Manifold is screwed into the rear of the trigger assembly of the Foaming Applicator and sealed with the O-ring which is fitted on the protruding end of the Manifold before screwing carefully into the rear end of the gun body. Use the AmbiSpanner™ supplied to tighten the manifold ONLY hand-tight to seal.

**WARNING - DO NOT ATTEMPT TO REMOVE THE MANIFOLD FROM THE COIL** – you risk causing permanent irreparable damage to the manifold (replacement drop coils are supplied with Manifold ready-fitted).

## Fig. 6 - EASIFOAMER SWITCH OPERATIONS & ELECTRICAL CONNECTIONS

**WARNING! DISCONNECT UNIT COMPLETELY FROM MAINS POWER BEFORE OPENING LID**

Unscrew 2 screws in corners of enclosure. Hinge lid open to reveal PCB inside lid.

Terminal blocks may be pulled off from PCB to allow easy connection of wires into Screw Terminals.

Positions of wires are noted **LEFT >> RIGHT** (see PCB Layout diagram below right)

**MAINS** = 230V AC 50Hz
- **L** = LIVE – **Brown** wire
- **E** = EARTH – **Green/Yellow** wire
- **N** = NEUTRAL – **Blue** wire

***MAINS*** *= 115V AC 60Hz*
- ***L*** *= HOT –* ***Black*** *wire*
- ***E*** *= EARTH –* ***Green*** *wire*
- ***N*** *= NEUTRAL –* ***White*** *wire*

### ELECTRICAL CONNECTIONS


### PCB LAYOUT – INSIDE OF ENCLOSURE LID

**P1** = Pump 1 – **Pink** wire +
**Grey** wire -

**P2** = Pump 2 – **Pink** wire +
**Grey** wire -

**PS** = Pressure Switch
- – **Brown** wire
- – **Blue** wire

**EARTH** – **Green/Yellow** wire (Marked as 0V on PCB)

Optional items where fitted:-

**VS** = Vacuum Switch
**EARTH** – **Green/Yellow** wire (Marked as 0V on PCB)
- – **Brown** wire
- – **Blue** wire

**NOTE:** Vacuum Switch must be configured so **Switch contacts** (Brown > Blue) are **CLOSED when Vacuum is OFF**

**FS1/2** = Float Switches 1 & 2
- – **Brown** wire
- – **White** wire

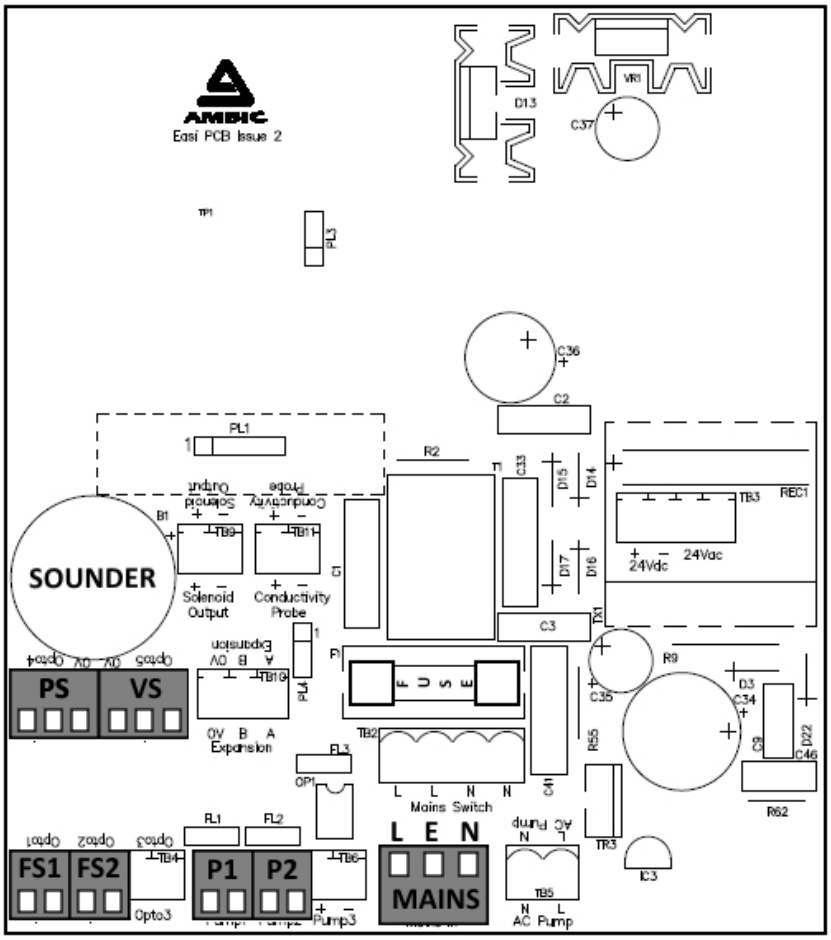

## Initial Setting Up – Electrical Connections & Calibration /Programming Functions

The EasiFoamer™ control box is connected up as shown in Fig. 6. It includes many useful safety and programmable features, for which the instructions following should be read through carefully to ensure efficient operation of the unit.

### EASIFOAMER – POWER UP/DOWN & NORMAL RUN DISPLAYS

| Action | Display | Comment /Action |
|---|---|---|
| Switch Mains Power ON<br>**Display 1** | Ambic Equipment<br>EasiFoamer V1.- - | Displays for 2 seconds.<br>Automatically changes to NEXT display |
| **Display 2** | Waiting for ←<br>Foam use | Pump(s) NOT running. Pressure Switch is either NOT connected, or Open and system at full operating Pressure. |
| If "**Run Single Pump**" selected<br>**Display 3** | Dispensing | If "**Run Single Pump**" selected<br>Single Pump running and Pressure Switch is Closed |
| **Or** - If "**Run Dual Pump**" selected<br>**Display 4** | Dual Dispensing | If "**Run Dual Pump**" selected<br>Both Pumps running and Pressure Switch is Closed |
| Press On/Off Button<br>**Display 5** | EasiFoamer<br>Power Down | Displays for 1 second, then screen blank.<br>Unit in "Standby / Off" |
| Press On/Off Button<br>**Display 2 / 3 or 4** | Waiting for ←<br>Foam use | Unit resumes Operation |
| Disconnect from Mains Power<br>**Display 6** | Powering down<br>Bye | Unit completely "Off"<br>Warning "Bleep" before screen blank. |

The Dual Pump EasiFoamer™ may be set to run with either a single pump, or with both pumps operating. This is controlled by the user-programmable setting selected from the menus detailed below.

Pumps are driven by low voltage DC motors and their speed of operation is controlled by the voltage applied to each pump motor. In order to ensure that the pumps are dispensing the correct quantity of chemical(s) there is a built-in facility to calibrate the pumps against a standard (100mL) cylinder (supplied).

**When 2-part chemicals are used with DUAL PUMP DISPENSING it is ESSENTIAL THAT ACCURATE CALIBRATION IS CARRIED OUT AFTER TUBE CHANGE.**
(refer to following pages).

continued . . .

## EASIFOAMER – BASIC MENU OPTION DISPLAYS

| Action | Display | Comment /Action |
|---|---|---|
| **SET SINGLE PUMP ONLY OPERATION** | | |
| Press ⇦ Button once **Display 7** | EasiFoamer ↑<br>Run Single Pump ↓ | Stops running and moves into MENU mode |
| Press □ Button once **Display 2 or 3** | Waiting for ←<br>Foam use | Reverts to OPERATE mode<br>Single Pump (L/H or R/H) ONLY runs |
| **SET DUAL PUMP OPERATION** | | |
| **From Display 7**<br>Press ⇩ Button once **Display 8** | EasiFoamer ↑<br>Run Dual Pump ↓ | Press □ Button once will Revert to OPERATE mode<br>Two Pumps running |
| **PRIME PUMP(S)** | | |
| **From Display 8**<br>Press ⇩ Button once **Display 9** | EasiFoamer ↑<br>Prime Pump 1 0 ↓ | Press & HOLD □ Button depressed until Pump 1 has primed with liquid (see **Prime Method**) |
| Press ⇩ Button once **Display 10** | EasiFoamer ↑<br>Prime Pump 2 0 ↓ | Press & HOLD □ Button depressed until Pump 2 has primed with liquid (see **Prime Method**) |
| **CALIBRATE PUMP(S)** | | |
| Press ⇩ Button once **Display 11** | EasiFoamer ↑<br>Calibrate Pump1 ↓ | For checking volume dispensing of Pump 1<br>(see **Calibration Method**) |
| Press ⇩ Button once **Display 12** | EasiFoamer ↑<br>Calibrate Pump2 ↓ | For checking volume dispensing of Pump 2<br>(see **Calibration Method**) |
| **SET PUMP(S) SPEED** | | |
| Press ⇩ Button once **Display S1** | Set Speed ↑<br>Pump 1 0↓ | Press □ Button once to access Pump Speed setting<br>(see **Set Pump Speed**) |
| Press ⇩ Button once **Display S2** | Set Speed ↑<br>Pump 2 0↓ | Press □ Button once to access Pump Speed setting<br>(see **Set Pump Speed**) |
| **SET SLEEP TIMER** | | |
| Press ⇩ Button once **Display T1** | Set Sleep ↑<br>Timer 0↓ | Press □ Button once to access Set Sleep Timer<br>(see **Set Sleep Timer**) |
| **SET RUN TIMER** | | |
| Press ⇩ Button once **Display T2** | Set Run ↑<br>Timer 0↓ | Press □ Button once to access Set Sleep Timer<br>(see **Set Run Timer**) |

| Action | Display | Comment /Action |
|---|---|---|
| **CHANGING PIN CODE** | | |
| Press ⇩ Button once **Display 13** | EasiFoamer ↑<br>Change PIN Code ↓ | For changing the PIN code used to access certain MENU items (see **Changing PIN**) |
| **PUMP STATISTICS** | | |
| Press ⇩ Button once **Display 14** | EasiFoamer ↑<br>Pump Statistics ↓ | Press ☐ Button once to access Pump Total Operating Times |
| **LANGUAGE CHANGE** | | |
| Press ⇩ Button once **Display 15** | EasiFoamer ↑<br>Change Language ↓ | Press ☐ Button once to Enter PIN Code to access Select Language screens (see **Changing Language**) |

## EASIFOAMER – CHANGING MENU LANGUAGE

By using the MENU screens, it is possible to set the screen language to either ENGLISH, FRANCAIS, DEUTSCH or ESPAÑOL as may be most appropriate.

| | | |
|---|---|---|
| Press ☐ Button once **Display 16** | Enter PIN code<br>– | The default PIN Code is entered by pressing the Buttons (in sequence):- ⇧ ⇦ ⇨ ⇩ |
| **SETTING ENGLISH MENU** | | |
| **From Display 16** Press ⇩ Button once **Display LE** | Select Language<br>English ← 0 → | Press ⇨ Button once to move to SET FRENCH MENU - **Display LF** (see below). |
| Press ☐ Button once confirms English **Display E** | EasiFoamer ↑<br>Change Language ↓ | Press ⇩ Button once to return to OPERATION MENU (**Display 7 or 8**) **ENGLISH MENU** set . |
| **SETTING FRENCH MENU** | | |
| **From Display LE** Press ⇨ Button once **Display LF** | Select. Langue<br>Francais ← 0 → | Press ⇨ Button once to move to **Display LD** or Button ⇦ to return to **Display LE**. |
| Press ☐ Button once **Display F** | EasiFoamer ↑<br>Select. Langue ↓ | Press ⇩ Button once to return to OPERATION MENU (**Display 7 or 8**) **FRENCH MENU** set. |
| **SETTING GERMAN MENU** | | |
| **From Display LE** Press ⇨ Button TWICE **Display LD** | Wahlen Sprache<br>Deutsch ← 0 → | Press ⇨ Button once to move to **Display LS** or Button ⇦ TWICE to return to **Display LE**. |
| Press ☐ Button once **Display D** | EasiFoamer ↑<br>Wahlen Sprache ↓ | Press ⇩ Button once to return to OPERATION MENU (**Display 7 or 8**) **GERMAN MENU** set. |

## SETTING SPANISH MENU

| | | |
|---|---|---|
| **From Display LE**<br>Press ⇨ Button THREE TIMES **Display LS** | Selec idioma<br>Español ← 0 → | Press ⇦ Button once to return to **Display LD** Button ⇦ THREE TIMES to return to **Display LE**. |
| Press ☐ Button once **Display S** | EasiFoamer ↑<br>Cambiar idioma ↓ | Press ⇩ Button once to return to OPERATION MENU (**Display 7 or 8**) **SPANISH MENU** set. |

## EASIFOAMER – PUMP CALIBRATION METHOD

| Action | Display | Comment /Action |
|---|---|---|

### SINGLE PUMP (PUMP 1) CALIBRATION METHOD

| | | |
|---|---|---|
| Use MENU to select **Display 11** | EasiFoamer ↑<br>Calibrate Pump 1↓ | For checking the dispensing volume of Pump 1. Take the calibration vessel (supplied) and place distribution /delivery tube into the vessel. |
| Press ☐ Button once **Display 16** | Enter PIN Code<br>– | The default PIN Code is entered by pressing the Buttons (in sequence):-<br>⇧ ⇦ ⇨ ⇩<br>(to change PIN - see **Changing PIN**) |
| Once correct PIN entered **Display 17** | Calibrate Pump1<br>Fill 100ml ← 0 | Pressing and HOLDING ☐ Button will run pump until button released. Pump can be run in small increments, by short presses, to fill precisely. |

### DUAL PUMP (PUMP 2) CALIBRATION METHOD

**For DUAL Pump Operation BOTH Pumps MUST be calibrated.**

| | | |
|---|---|---|
| Use MENU to select **Display 12** | EasiFoamer ↑<br>Calibrate Pump 2↓ | For checking the dispensing volume of Pump 2. Take the calibration vessel (supplied) and place distribution /delivery tube into the vessel. |
| Press ☐ Button once **Display 16** | Enter PIN Code<br>– | The default PIN Code is entered by pressing the Buttons (in sequence):-<br>⇧ ⇦ ⇨ ⇩ |
| Once correct PIN entered **Display 20** | Calibrate Pump2<br>Fill 100ml ← 0 | Pressing and HOLDING ☐ Button will run pump until button released. Pump can be run in small increments, by short presses, to fill precisely. |

## EASIFOAMER – SET PUMP SPEED
**Only required for two pump system.**

| Action | Display | Comment /Action |
|---|---|---|
| Use MENU to select **Display S1** | Set Speed ↑<br>Pump 1 0↓ | Press ☐ Button once to access Pump 1 Speed |
| Press ☐ Button once **Display S3** | Pump 1 ↑<br>Speed = 100% 0↓ | **Enter the motor Speed required** by pressing the Button ⇧ to increase the speed or Button ⇩ to decrease the speed |
| **Using** ⇧ & ⇩ adjust the Pump 1 speed **Display S4** | Pump 1 ↑<br>Speed = 50% 0↓ | Press ☐ Button once to accept the Pump 1 speed |
| Press ☐ Button once **Display S1** | Set Speed ↑<br>Pump 1 0↓ | Press Button ⇩ to access Pump 2 Speed setting |
| Use MENU to select **Display S2** | Set Speed ↑<br>Pump 2 0↓ | Press ☐ Button once to access Pump 2 Speed |
| Press ☐ Button once **Display S5** | Pump 2<br>Speed = 100% 0↓ | **Enter the motor Speed required** by pressing the Button ⇧ to increase the speed or Button ⇩ to decrease the speed |
| **Using** ⇧ & ⇩ adjust the Pump 1 speed **Display S6** | Pump 2 ↑<br>Speed = 120% 0↓ | Press ☐ Button once to accept the Pump 2 speed |
| Press ☐ Button once **Display S2** | Set Speed ↑<br>Pump 2 0↓ | Press Button ⇩ to access Set Sleep Timer |

## EASIFOAMER – SET SLEEP TIMER

| | | |
|---|---|---|
| Use MENU to select **Display T1** | Set Sleep ↑<br>Timer 0↓ | Press ☐ Button once to access Set Sleep Timer |
| Press ☐ Button once **Display T3** | Sleep Timer ↑<br>00:30 0↓ | Press ⇧ ⇩ Button to Set Sleep Timer (Default set at 30 Minutes) |
| Press ⇧ or ⇩ Button **Display T4** | Sleep Timer ↑<br>00:45 0↓ | Press ☐ Button once to accept the Sleep Timer set. |
| Press ☐ Button once **Display T1** | Set Sleep ↑<br>Timer 0↓ | Press ⇩ Button once to access Set Run Timer |

## EASIFOAMER – SET RUN TIMER

| Action | Display | Comment /Action |
|---|---|---|
| Use MENU to select **Display T2** | Set Run ↑<br>Timer 0↓ | Press ☐ Button once to access Set Run Timer |
| Press ☐ Button once **Display T5** | Run Timer ↑<br>00:15 0↓ | Press ⇧ ⇩ Button to Set Run Timer (Default set at 15 Minutes) |
| Press ⇧ or ⇩ Button **Display T6** | Run Timer ↑<br>00:30 0↓ | Press ☐ Button once to accept the Run Timer set. |
| Press ☐ Button once **Display T2** | Set Run ↑<br>Timer 0↓ | Press ⇩ Button once to access Change Pin Code |

## EASIFOAMER – CHANGING PIN CODE

| | | |
|---|---|---|
| Use MENU to select **Display 13** | EasiFoamer ↑<br>Change PIN Code ↓ | To change the PIN code used to access certain MENU items. |
| Press ☐ Button once **Display 16** | Enter PIN Code<br>_ | **Enter the current PIN Code** by pressing the Buttons (in sequence):-<br>(default factory PIN = ⇧ ⇦ ⇨ ⇩ ) |
| If incorrect PIN entered **Display 21** | Incorrect PIN<br>Code entered | After short delay, reverts to **Display 13** |
| After correct PIN entered and a short delay **Display 22** | Enter new PIN<br>↑→↑→_ | **Enter new 4-digit PIN Code** by pressing any combination of these four Buttons:-<br>⇦ ⇨ ⇩ ⇧<br>New PIN is displayed as entered. |
| A short delay after final PIN digit entered **Display 23** | Saved PIN Code<br>↑→↑→_ | Displays new PIN.<br>After short delay, reverts to **Display 13** |

## EASIFOAMER – SERVICE STATISTICS

| Action | Display | Comment /Action |
|---|---|---|
| **PUMP STATISTICS** | | |
| Use MENU to select **Display 14** | EasiFoamer ↑<br>Pump Statistics ↓ | Enables access to Pump Chemical usage. Enables access to Pump & Pressure Switch Total Operating Times (which determine Warning Alerts) |
| Press ☐ Button once **Display 24** | Pump 1: 12.12L<br>Pump 2: 48.09L | Displays total chemical used in Litres by each Pump (based on Calibration) since last reset.<br>**Press** ⇩ to return to **Display 25** |
| Press ⇩ Button once **Display 25** | Tube→ 0000h<br>Swit→ 0000h | Displays total running hours of **Tubes** & **Pressure Switch** since last reset. (in Hours).<br>**Press** ⇩ to return to **Display 7** |

When **running hours** of pump **Peristaltic Tube(s) exceeds 150 hours – Warning display flashes.**
When **running hours** of **Pressure Switch exceeds 300 hours – Warning display flashes.**
(see **WARNING DISPLAYS**).

## EASIFOAMER – WARNING DISPLAYS

**NOTE: none of these Warning Displays actually stop normal operation of the EasiFoamer™ BUT, if ignored, foam production and consistency will ultimately deteriorate.**

| Action | Display | Comment /Action |
|---|---|---|
| After **Pump** has run for more than **150 hours** **Display W1** | Replace Tube<br>and Recalibrate | Displays for 2 seconds. **Automatically alternates** with normal operational displays (e.g. **Display 2 & 3**). **** Peristaltic Pump Tubes should be renewed as soon as possible **** |
| After **Pressure Switch** has operated for more than **300 hours** **Display W2** | Replace Pressure<br>Switch | Displays for 2 seconds. **Automatically alternates** with normal operational displays (e.g. **Display 2 & 3**). **** Pressure Switch should be renewed as soon as possible **** |

**The above Warnings do NOT activate the Sounder**

**<u>IF LEVEL PROBES ARE FITTED IN CHEMICAL CONTAINERS</u>**

| Action | Display | Comment/Action |
|---|---|---|
| When Drum 1 becomes LOW in chemical **Display W3** | Chemical 1<br>Low Level Alarm | **Automatically alternates** with normal operational displays (e.g. **Display 2 & 3 or 4**) and Sounder activates – see below. **** Refill/replace container 1 as soon as possible **** |
| When Drum 2 becomes LOW in chemical **Display W4** | Chemical 2<br>Low Level Alarm | **Automatically alternates** with normal operational displays (e.g. **Display 2 & 3 or 4**) and Sounder activates – see below. **** Refill/replace container 2 as soon as possible **** |
| If BOTH Drum 1 & 2 become LOW in chemical **Display W5** | Chemical 1 & 2<br>Low Level Alarm | **Automatically alternates** with normal operational displays (e.g. **Display 2 & 3 or 4**) and Sounder activates – see below. **** Refill/replace BOTH containers as soon as possible **** |

If Optional Level Probes (e.g. AFF/200-50-10 – Float Switch Assembly for 20-25 Litre Container) are fitted, then when LOW level of Chemical activates Float Switch:-

- Sounder will operate 3 times every 2-3 seconds
- Sounder sequence will continue to operate at 1-minute intervals
- Warning Display as above will alternate with normal run displays
- Sounder and Warning Display stops automatically when container refilled/replaced when pump makes first Dispensing cycle after refill.
- Sounder CANNOT be muted until level of Chemical above “LOW”.

Continued . . . .

## EASIFOAMER – RESETTING (AFTER WARNING DISPLAYS)

**When Pump Peristaltic tube(s) have been replaced, ALWAYS Reset the counter** as follows:-
**When Pressure Switch has been replaced, ALWAYS Reset the counter** as follows:-

| Action | Display | Comment /Action |
|---|---|---|
| Use main Menu to select **Display 14** | EasiFoamer ↑<br>Pump Statistics ↓ | Press ☐ Button once (to access Chemical Usage volumes - **Display 23**) Then Press ⇩ Button once |
| After Press of ⇩ Button **Display 24** | Tube → 0000h<br>Swit → 0000h | Press ⇩ Button once and one of two requester screens (26 or 27) will appear. |
| When "**Change Tube**" shows **Display 26** | Confirm Tube<br>Replacement | Press ☐ Button once to confirm **New Tube(s) fitted** or, if no tube fitted, **press** ⇧ to return to **Display 14** |
| Press ☐ Button once **Display 16** | Enter PIN code<br>– | **Enter the current PIN Code** by pressing the Buttons (in sequence):-<br>(default factory PIN = ⇧ ⇦ ⇨ ⇩ ) |
| After entering the PIN code, the display **Display W6** | Confirm Tube<br>Replaced | The display will show confirm Tube Replaced for 2 seconds and then change to normal operational display. (e.g Display 2 or 3) |
| When "**Change Switch** " shows **Display 27** | Confirm Switch<br>Replacement | Press ☐ Button once to confirm **New Switch fitted** or, if no Switch fitted, **press** ⇧ to return to **Display 14** |
| Press ☐ Button once **Display 16** | Enter PIN code<br>– | **Enter the current PIN Code** by pressing the Buttons (in sequence):-<br>(default factory PIN = ⇧ ⇦ ⇨ ⇩ ) |
| After entering the PIN code, the display **Display W8** | Confirm Switch<br>Replaced | The display will show "Confirm Tube Replaced" for 2 seconds and then change to normal operational display. (e.g Display 2 or 3) |
| After confirmation New Parts fitted, returns to **Display 7 (or 8)** | EasiFoamer ↑<br>Run Single Pump ↓ | Unit returns to normal operation and warning cleared at next "Dispensing" screen. |

Continued . . . .

## Initial Setting Up – Priming & Setting up the system ready to use

Leave the Foam Applicator at the far end of the distribution line disconnected and, in its place, fit a short length of tube resting in a suitable container in order to collect any chemical discharged.
Switch on the power at the electric socket and on the front of the pumping unit. Power Unit (**A1**) will be activated and liquid will start to be drawn up through the pump(s). Allow unit to run until liquid has passed through the pump(s) and is flowing out in a continuous stream from the end of the distribution pipe (this may take a few minutes on a system with a long distribution line). At this point, turn Off the unit and fit the final applicator. Briefly remove the plug from the T-piece below the small enclosure (**A2**) replacing it as soon as liquid runs out, to ensure liquid has reached the pressure switch.

Switch the pump unit back On and, when the Pressure Reservoir Bottle (**W**) has been filled to a level of about 30mm, and a liquid pressure of ~3psi (0.2 Bar) is reached, the pressure switch will automatically switch off the peristaltic pump(s), which will not operate until a gun is used and pressure drops. If pumps fail to stop within 1 minute (or run continuously) then check the distribution line system for leaks.

Switch on the air supply, adjust the pressure regulator initially to 3 – 4 psi and check the quality of foam by depressing the trigger on each applicator in turn. Initially the foam may not be produced until a continuous stream of liquid has reached the base of the foaming cup; priming each applicator takes no more than a few seconds and is accomplished by holding the trigger fully depressed until foam forms and fills the applicator cup.

**Foam Quality/Wetness** may be adjusted by regulating the relative liquid to air pressure ratio. The unit will have been preset in the factory to a near optimum liquid pressure and it is therefore preferable to adjust the air pressure to arrive at the desired foam quality. Increasing Air pressure will make the foam more “dry” (very frothy and tending towards larger air bubbles), whilst decreasing air pressure will both reduce the rate of production of foam and make the foam “wetter” ultimately to the extent where foam collapses very quickly to leave fluid in applicator cup. The difference in air pressure between these extremes typically covers the pressure range of 2 – 6 psi (with liquid pressure set at 3 psi). Generally the Air pressure should be within ±2 psi of Liquid pressure.

## OPERATION

When ready to dip, depress the trigger until foam is level or just above the rim of Applicator (**F**) and raise fully onto teat. Typically a full cup will dip two teats.

**WARNING – Refill chemical container(s) BEFORE EMPTY and SWITCH OFF PUMP UNIT whilst refilling.** In the event that chemical supply is exhausted, it will be necessary to re-prime system as described in the section “Initial Setting Up” above.

## WHEN MILKING IS COMPLETED SWITCH OFF ELECTRIC POWER SUPPLY and rinse out cups with warm water.

## MAINTENANCE

Applicator Cups should be rinsed out with clean warm water to remove any hairs, dirt, etc. immediately following completion of milking – this should avoid the build-up of deposits and prevent chemical solidifying in the gauze. If foam production becomes slow and/or difficult then the Foaming Applicator cup may be easily dismantled (see Fig. 6 below) for cleaning as follows:-

- Unscrew the cup assembly (**N**) and remove from the end of the lance (**P**) by gripping the outside of the cup and turning anti-clockwise.
- Carefully lift out the 3 Filter Gauzes (**T**), and then lift off and retain the large O-ring (**S**) from the cup/retainer (**R**) at the end of the lance.

The gauzes may be cleaned by immersion in hot water and any stubborn material removed with a soft brush before re-assembling in the cup with O-ring on the bottom.

.

Use ONLY a soft dry cloth to clean the electrical enclosure housing when necessary – NEVER use a hose. If the supply cord is damaged, it must be replaced by the manufacturer, its service agent or similarly qualified persons in order to avoid a hazard. Always disconnect the supply cord from the mains power supply BEFORE removing the enclosure lid.

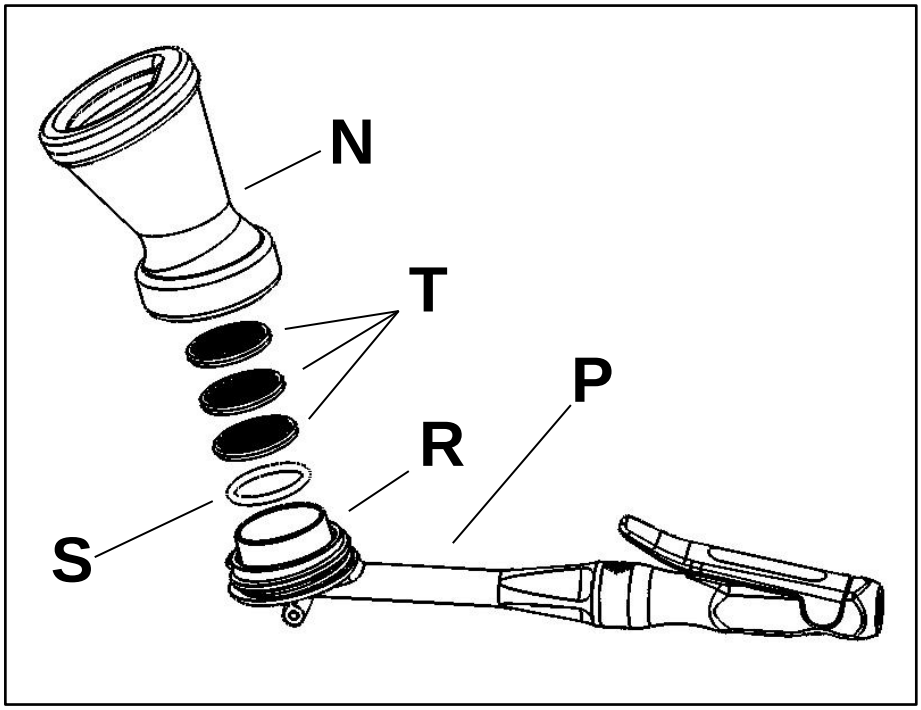


**Fig. 6 – DISMANTLING FOAM APPLICATOR FOR CLEANING**

## ANNUAL MAINTENANCE

In order to preserve the efficiency and reliability of the EasiFoamer™ system, we recommend that the following parts be replaced EVERY 1 – 2 YEARS, depending on number of cows dipped.

| | |
|---|---|
| **Peristaltic pump tubes** | **–** for **Single Pump** units use kit **ALP/101**.<br>**–** for **Twin Pump** units use kit **ALP/101-2**. |
| **Pressure Switch** | **–** use kit **AAF/013.** |

## PROBLEMS & FAULT FINDING

**WARNING - Always disconnect the supply cord from the mains power supply BEFORE removing the enclosure lid.**

| Problem | Likely Cause | Probable Solution |
|---|---|---|
| No foam produced when trigger squeezed (ALL units) | No Air Supply present<br><br>No liquid present | Switch on Air supply<br>Check for leaking connections on distribution tubing system.<br>Switch on pumping unit; check pump turns when gun trigger depressed.<br>Check/replenish chemical and prime system, if necessary. |
| No foam produced when trigger squeezed (at one unit only) | Air supply and/or liquid not reaching foaming applicator. | Leaking connections, or blocked tubing – check and remedy.<br>Trigger valve stuck or blocked – unscrew valve and check, or replace with AAF/015.<br>Foaming cup dirty or blocked – clean to remove dirt from gauzes, or replace with new cup. |
| Foam very dry, or a few large bubbles only produced when trigger squeezed. | No liquid supply or restriction in liquid distribution pipe work. | Check chemical container not empty.<br>Check inlet tubing is always full of liquid and no leaks at connection to pump(s)<br>Check distribution tubing (Blue) for continuity of liquid supply.<br>Check Pump(s) running when trigger squeezed and held open.<br>Check Air pressure not set too high at regulator – reduce pressure to 3-4 psi, if necessary. |
| Foam very wet, or only liquid rises in cup when trigger squeezed. | No air supply, or air distribution pipe work restricted/blocked.<br><br>Foaming cup air feed blocked/restricted. | Check Air supply switched On.<br>Check for leaking connections on air distribution tubing (Black) system.<br>Check Air pressure not set too Low at regulator.<br>Unscrew applicator cup from lance; remove gauze disks; turn Off Pumping Unit; depress applicator trigger and check for Air flowing from hole in centre of Cup.<br>Check that Air is reaching Applicator at gun body entry. Clean/ unblock cup and tubing, as appropriate. |
| No liquid reaching applicator drops. | Pump(s) not turning when triggers held squeezed.<br><br>Pump(s) turning but not pumping liquid. | Check fuses and replace if necessary.<br>Check for blockages in Inlet and Outlet pipes.<br>Possible Pressure Switch failure (inside small enclosure – **A2**) - consult engineer.<br>Check for leakage (or blockage) in Inlet pipe.<br><br>Possible failure of peristaltic pump tubing – consult engineer for replacement. |

## DRILLING TEMPLATE

Use the template below to mark out fixing holes for the pump enclosure (Regulator fixing holes also shown - inset).
DO NOT FORGET TO ALLOW SPACE ON BOTH SIDES AND BELOW UNIT FOR PUMP HEADS, PRESSURE BOTTLE, TUBING AND TO PERMIT EASY ACCESS TO SERVICE PUMPS (when required).

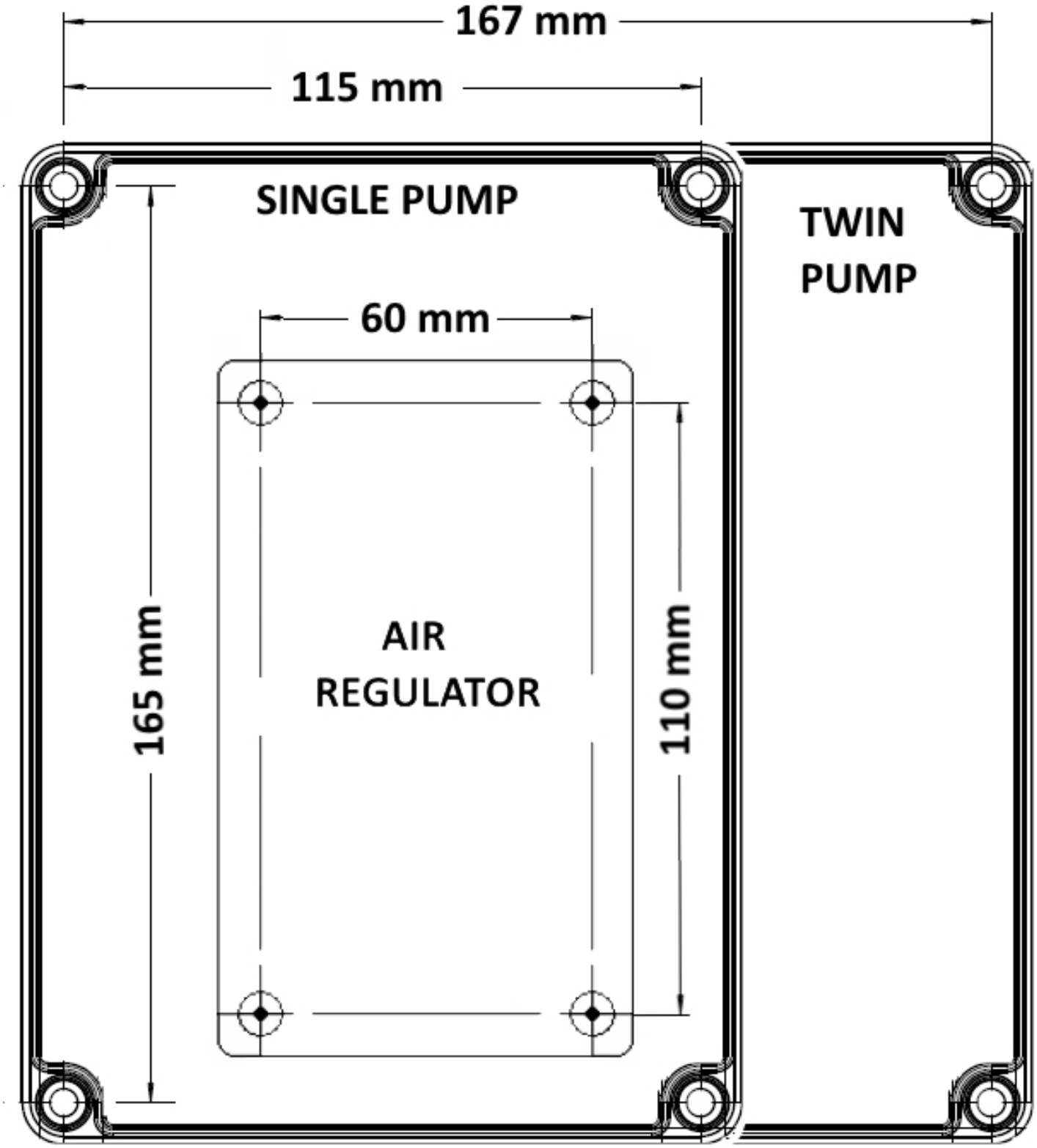

Ambic Equipment Limited,
1 Parkside, Avenue Two, Station Lane,
Witney, Oxfordshire, OX28 4YF. England
Tel: +44 (0)1993 776555  Fax: +44 (0)1993 779039
www.ambic.co.uk